Kinedo

showers

May 2010

For latest prices and delivery to your door visit MyTub Ltd - 0845 303 8383 - www.mytub.co.uk - info@mytub.co.uk

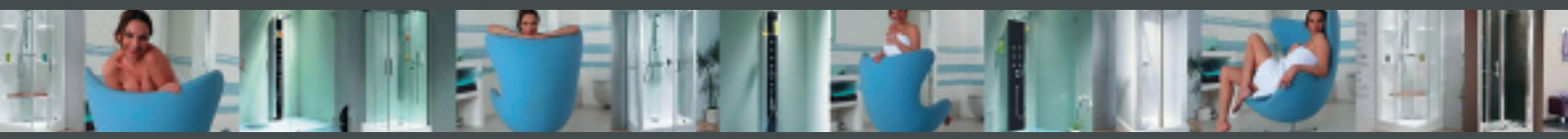

silicone free cubicles
1 to 14

wet room panels
15 to 17

enclosures
18 to 27

bath screen &
shower columns
28-29

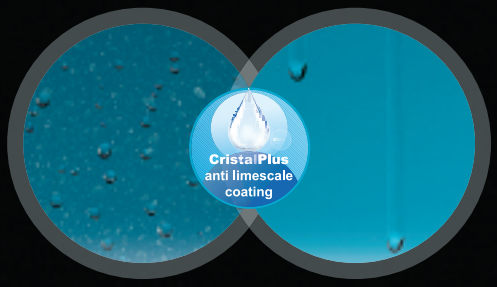

without CristalPlus with CristalPlus

Whenever you see the CristalPlus logo all glass surfaces are treated with our anti-limescale coating

stylish | practical | affordable

For latest prices and delivery to your door visit MyTub Ltd - 0845 303 8383 - www.mytub.co.uk - info@mytub.co.uk

horizon corner

FEATURES

- Silicone Free
- Cristalplus
- 8mm toughened safety glass
- 800 X 800 & 900 X 900mm Pivot and Sliding versions
- Adjustable shelves

horizon corner

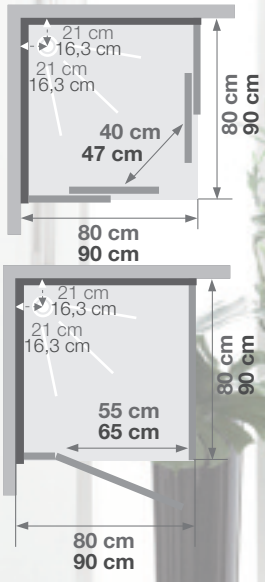

Product shown in BLACK PEARL colour way

* STEEL GREY is the standard finish.

Other colours to special order only.

Thermostatic control and diverter valve

Name	Product Code						Size
	SAPPHIRE	STEEL GREY*	LIME	BLACK	RUBY	GOLD	
Horizon Corner Slider Thermo:	CA116S12	CA116A12	CA116C12	CA116N12	CA116R12	CA116P12	800x800mm
Horizon Corner Slider Thermo:	CA117S12	CA117A12	CA117C12	CA117N12	CA117R12	CA117P12	900x900mm
Horizon Corner Pivot Thermo:	CA136S12	CA136A12	CA136C12	CA136N12	CA136R12	CA136P12	800x800mm
Horizon Corner Pivot Thermo:	CA137S12	CA137A12	CA137C12	CA137N12	CA137R12	CA137P12	900x900mm

For latest prices and delivery to your door visit MyTub Ltd - 0845 303 8383 - www.mytub.co.uk - info@mytub.co.uk

horizon 1100x800

FEATURES

- Generously proportioned
- Silicone Free
- CristalPlus
- Reversible for left or right installation
- 8mm toughened safety glass
- Sliding and Pivot versions available

1100 x 800

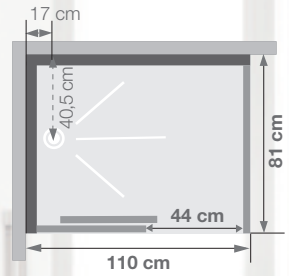

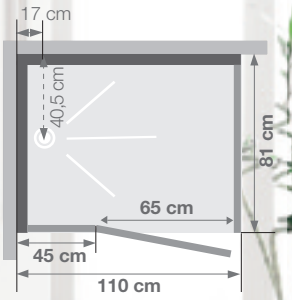

CristalPlus anti limescale coating

No Silicone Sealant Required

ASSURED NO LEAKS WATERTIGHT

Product shown in standard STEEL GREY colour

* STEEL GREY is the standard finish.

Other colours to special order only.

Hand-held shower detail

Name	Product Code						Size
	SAPPHIRE	STEEL GREY*	LIME	BLACK	RUBY	GOLD	
Horizon Corner Slider Thermo:	CA119S12	CA119A12	CA119C12	CA119N12	CA119R12	CA119P12	800x800mm
Horizon Corner Pivot Thermo:	CA139S12	CA139A12	CA139C12	CA139N12	CA139R12	CA139P12	900x900mm

For latest prices and delivery to your door visit MyTub Ltd - 0845 303 8383 - www.mytub.co.uk - info@mytub.co.uk

horizon quad

FEATURES

- An elegant yet functional all glass design
- Silicone Free
- Cristalplus
- Adjustable glass shelves
- 900 x 900mm
- Toughened safety glass
- Sliding and Pivot versions available

quadrant

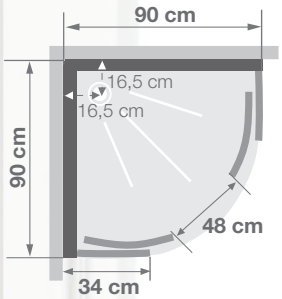

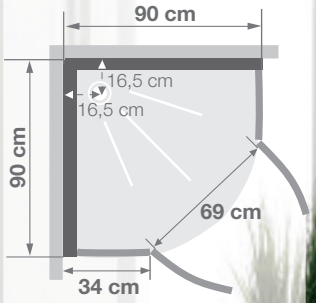

CristalPlus anti limescale coating

No Silicone Sealant Required

ASSURED NO LEAKS WATERTIGHT

Product shown in LIME colour way

* STEEL GREY is the standard finish.

Other colours to special order only.

Overhead shower detail

Name	Product Code						Size
	SAPPHIRE	STEEL GREY*	LIME	BLACK	RUBY	GOLD	
Horizon Quadrant Slider Thermo:	CA118S12	CA118A12	CA118C12	CA118N12	CA118R12	CA118P12	800x800mm
Horizon Quadrant Pivot Thermo:	CA138S12	CA138A12	CA138C12	CA138N12	CA138R12	CA138P12	900x900mm

For latest prices and delivery to your door visit MyTub Ltd - 0845 303 8383 - www.mytub.co.uk - info@mytub.co.uk

freestyle 2000

FEATURES

- Corner Entry
- Small 800 x 800mm footprint
- Thermo and plain versions available
- 1980mm high
- Silicone Free
- CristalPlus
- Plain version will accommodate either a shower valve or an electric shower

freestyle 2000

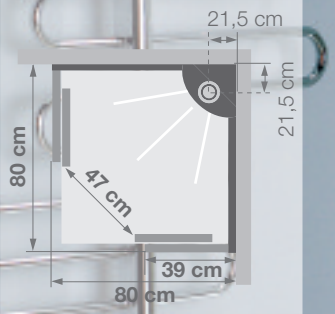

CristalPlus anti limescale coating

No Silicone Sealant Required

ASSURED NO LEAKS WATERTIGHT

Freestyle 2000

Product Code

CA 63 Freestyle 2000 Thermo

CA 66 GB Freestyle 2000 Standard

For latest prices and delivery [illegible] 8383 - www.mytub.co.uk - info@mytub.co.uk

lagune

FEATURES

- Pivot door and Panel
- Small 800 x 800mm footprint
- 1980mm high
- Reversible
- Silicone Free
- CristalPlus

lagune

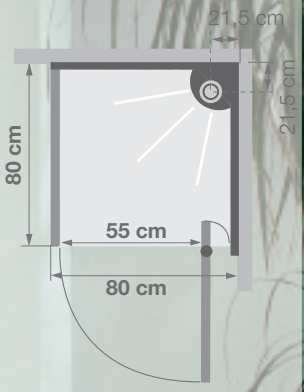

CristalPlus anti limescale coating

No Silicone Sealant Required

ASSURED NO LEAKS WATERTIGHT

Lagune

Product Code

CA 61 Lagune Thermo

For latest prices and delivery to your door visit MyTub Ltd - 0845 303 8383 - www.mytub.co.uk - info@mytub.co.uk

epsilon saloon

FEATURES

- Saloon Doors
- Small 800 x 800mm footprint
- Designed for recessed installations
- Thermo and plain versions available
- 2075mm high
- Silicone Free
- Plain version will accommodate either a shower valve or an electric shower
- 6mm glass

epsilon saloon

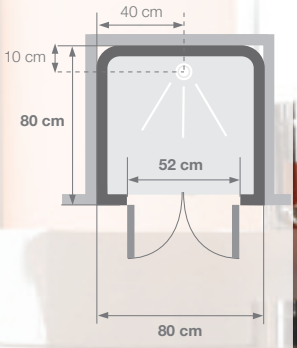

Epsilon Saloon
Product Code
CA 06 T Epsilon Thermo
CA 06 GB Epsilon Standard

For latest prices and delivery to your door visit MyTub Ltd - 0845 303 8383 - www.mytub.co.uk - info@mytub.co.uk

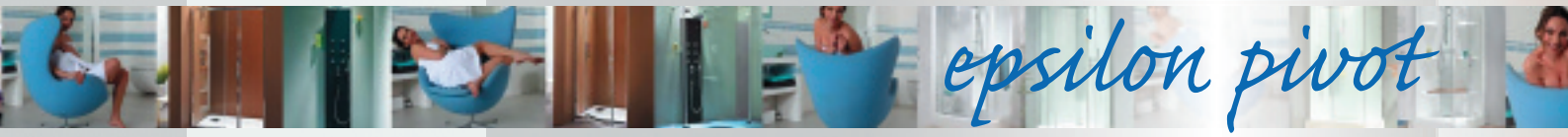

epsilon pivot

FEATURES

- Reversible Pivot Door
- Small 800 x 800mm footprint
- Designed for recessed installations
- Thermo and plain versions available
- 2075mm high
- Silicone Free
- Plain version will accommodate either a shower valve or an electric shower
- 6mm glass

epsilon pivot

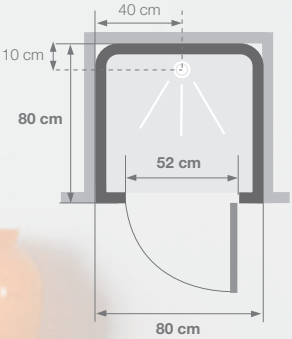

No Silicone Sealant Required

ASSURED NO LEAKS WATERTIGHT

Epsilon Pivot	
Product Code	
CA 05 T	Epsilon Thermo
CA 05 GB	Epsilon Standard

For latest prices and delivery to your door visit MyTub Ltd - 0845 303 8383 - www.mytub.co.uk - info@mytub.co.uk

consort

FEATURES

- Inward opening saloon style styrene doors
- 2020mm high
- Ideal for multi installation applications
- Can be fitted against one wall or into a corner
- Silicone Free
- Will accommodate an electric shower or mechanical shower valve

consort

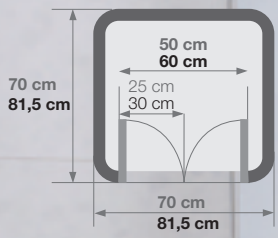

Before

After

ASSURED NO LEAKS WATERTIGHT

No Silicone Sealant Required

Consort

Product Code	Size
CA 10 GB	815 x 815
CA 16 GB	700 x 700

No shower fitments supplied. Shower fitments shown for illustrative purposes only.

For latest prices and delivery to your door visit MyTub Ltd - 0845 303 8383 - www.mytub.co.uk - info@mytub.co.uk

opus 1000x800 corner

FEATURES

- Generously proportioned
- 2070mm high
- Removeable frosted glass shower panel
- Silicone free
- CristalPlus
- Towel rail
- Thermostatic shower valve

opus 1000 x 800 corner

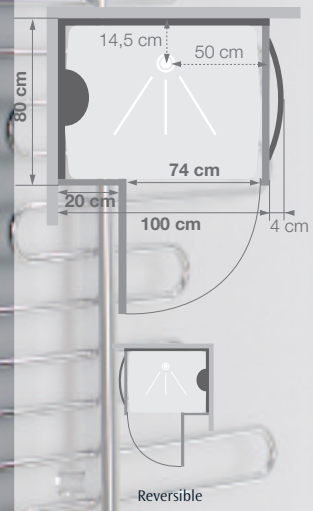

CristalPlus anti limescale coating

No Silicone Sealant Required

ASSURED NO LEAKS WATERTIGHT

Opus 1000 x 800 Corner

Product Code:	Size
CA 76 Opus Corner Pivot Thermo	1000 x 800

For latest prices and delivery to your door visit MyTub Ltd - 0845 303 8383 - www.mytub.co.uk - info@mytub.co.uk

opus 1000x800 one wall

FEATURES

- Generously proportioned
- 2070mm high
- Removeable frosted glass shower panel
- Silicone free
- CristalPlus
- Towel rail
- Thermostatic shower valve

opus 1000x800 one wall

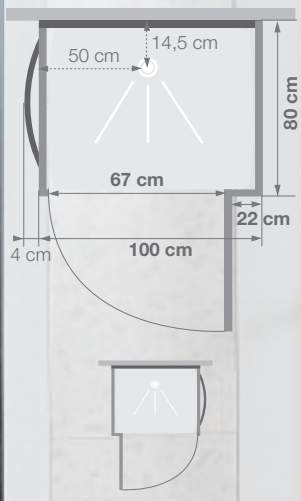

Reversible

CristalPlus anti limescale coating

No Silicone Sealant Required

ASSURED NO LEAKS WATERTIGHT

Opus 1000 x 800 One Wall

Product Code:	Size
CA105 Opus 1 Wall Thermo	1000 x 800

For latest prices and delivery to your door visit MyTub Ltd - 0845 303 8383 - www.mytub.co.uk - info@mytub.co.uk

opus 1000x800 recess

FEATURES

- Generously proportioned
- 2070mm high
- Removeable frosted glass shower panel
- Silicone free
- CristalPlus
- Thermostatic shower valve

opus 1000 x 800 Recess

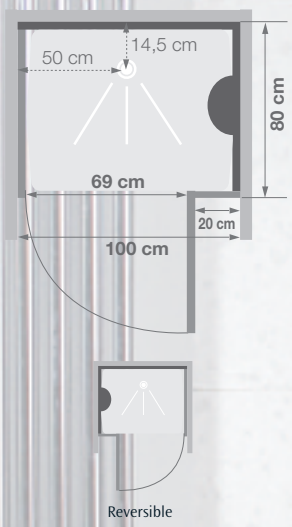

Crista Plus anti limescale coating

No Silicone Sealant Required

ASSURED NO LEAKS WATERTIGHT

Opus 1000 x 800 Recess

Product Code:	Size
CA111 Opus Recess Thermo	1000 x 800

For latest prices and delivery to your door visit MyTub Ltd - 0845 303 8383 - www.mytub.co.uk - info@mytub.co.uk

kineprime corner entry

FEATURES

- Available to fit into a corner
- 2010mm high
- White frame opaque glass
- No tiling, grouting or silicone
- Magnetic door seal
- Supplied with manual shower valve
- Adjustable feet
- Flexible waste connector
- Mirror
- Clip out doors to aid cleaning

kineprime corner entry

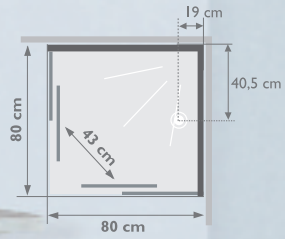

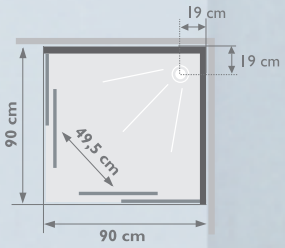

No Silicone Sealant Required

ASSURED NO LEAKS WATERTIGHT

Kineprime Corner

Product Code	Size
CA500: Corner Slider	800 x 800mm
CA501: Corner Slider	900 x 900mm

For latest prices and delivery to your door visit MyTub Ltd - 0845 303 8383 - www.mytub.co.uk - info@mytub.co.uk

kineprime quad

FEATURES

- Available to fit into a corner
- 2005mm high
- White frame opaque glass
- No tiling, grouting or silicone
- Magnetic door seal
- Supplied with manual shower valve
- Adjustable feet
- Flexible waste connector
- Mirror
- Clip out doors to aid cleaning

kineprime quad

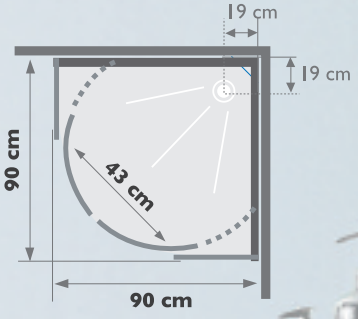

No Silicone Sealant Required

ASSURED NO LEAKS WATERTIGHT

Kineprime Quadrant

Product Code:	Size
CA503: Kineprime Quadrant	900 x 900mm

For latest prices and delivery to your door visit MyTub Ltd - 0845 303 8383 - www.mytub.co.uk - info@mytub.co.uk

kineprime corner 1000x800

FEATURES

- Available to fit into a corner
- 2100mm high
- White frame opaque glass
- No tiling, grouting or silicone
- Magnetic door seal
- Supplied with manual shower valve
- Adjustable feet
- Flexible waste connector
- Mirror
- Clip out doors to aid cleaning
- Reversible

kineprime corner

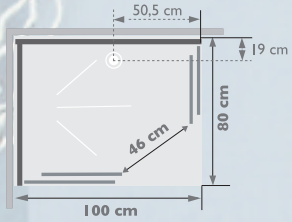

No Silicone Sealant Required

ASSURED NO LEAKS WATERTIGHT

Corner 1000 x 800

Product Code:	Size
CA502: Kineprime Corner	1000 x 800mm

For latest prices and delivery to your door visit MyTub Ltd - 0845 303 8383 - www.mytub.co.uk - info@mytub.co.uk

FEATURES

- Single fixed panel
- 6mm toughened safety glass
- Ultra minimalist styling
- Two adjustable wall brackets
- Polished wall support with robe hook
- 2000mm high (ex. wall support)
- Fully reversible for left or right hand
- CristalPlus

solo

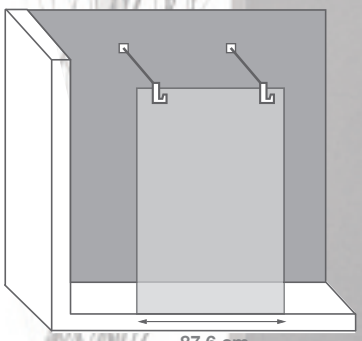

87,6 cm
97,6 cm
117,6 cm

Wall bracket detail

CristalPlus anti limescale coating

Single Panel

Product Code	Size	Frame/Glass
PA530CTNE	900mm	Polished Silver/Clear
PA531CTNE	1000mm	Polished Silver/Clear
PA532CTNE	1200mm	Polished Silver/Clear

For latest prices and delivery to your door visit MyTub Ltd - 0845 303 8383 - www.mytub.co.uk - info@mytub.co.uk

kinespace wet room

FEATURES

- Single fixed panel with one 450mm hinged return panel
- 6mm toughened safety glass
- Ultra minimalist styling
- Two adjustable wall brackets
- Polished wall support with robe hook
- 2000mm high (ex. wall support)
- Fully reversible for left or right hand
- CristalPlus

duo

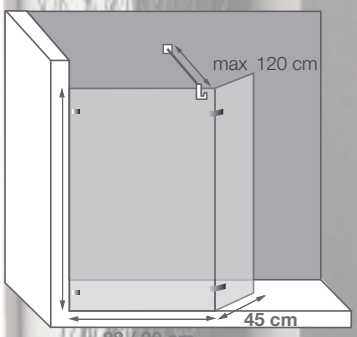

88 / 90 cm
98 / 100 cm
118 / 120 cm

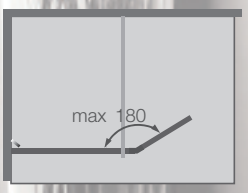

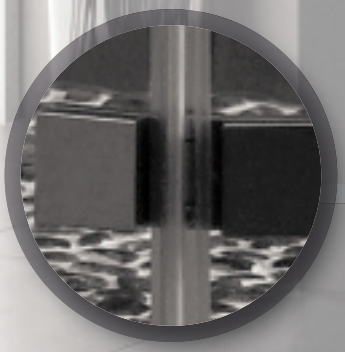

hinge detail

CristalPlus anti limescale coating

Single Fixed Panel with one hinged 450mm return

Product Code	Size	Frame/Glass
PA540CTNE	900mm	Polished Silver/Clear
PA541CTNE	1000mm	Polished Silver/Clear
PA542CTNE	1200mm	Polished Silver/Clear

For latest prices and delivery to your door visit MyTub Ltd - 0845 303 8383 - www.mytub.co.uk - info@mytub.co.uk

FEATURES

- Single fixed panel with two 450mm hinged return panels
- 6mm toughened safety glass
- Ultra minimalist styling
- Two adjustable wall brackets
- Polished wall support with robe hook
- 2000mm high (ex. wall supports)
- CristalPlus

trio

Wall bracket detail

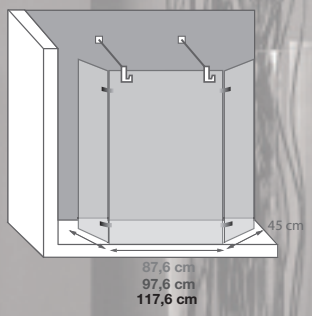

CristalPlus anti limescale coating

Single Fixed Panel with two hinged 450mm returns

Product Code	Size	Frame/Glass
PA550CTNE	900mm	Polished Silver/Clear
PA551CTNE	1000mm	Polished Silver/Clear
PA552CTNE	1200mm	Polished Silver/Clear

For latest prices and delivery to your door visit MyTub Ltd - 0845 303 8383 - www.mytub.co.uk - info@mytub.co.uk

capricorn telescopic pivot door

FEATURES

- Telescopic
- 1900mm high
- Reversible door
- CristalPlus
- Ultimate adjustability
- Full height screw cover strips
- Profile cover caps
- 6mm toughened safety glass

telescopic pivot door

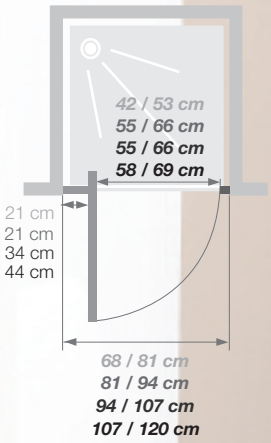

CristalPlus anti limescale coating

Telescopic Pivot Door

Product Code	Adjustment	Frame/Glass
PA631CTNE	680mm to 810mm	Polished Silver/Clear
PA632CTNE	810mm to 940mm	Polished Silver/Clear
PA633CTNE	940mm to 1070mm	Polished Silver/Clear
PA634CTNE	1070mm to 1200mm	Polished Silver/Clear

When using a side panel add 37mm to these adjustments

For latest prices and delivery to your door visit MyTub Ltd - 0845 303 8383 - www.mytub.co.uk - info@mytub.co.uk

capricorn bi-fold door

FEATURES

- Inward Opening door
- 1900mm high
- Full height screw cover strips
- Profile cover caps
- Toughened safety glass

bi-fold door

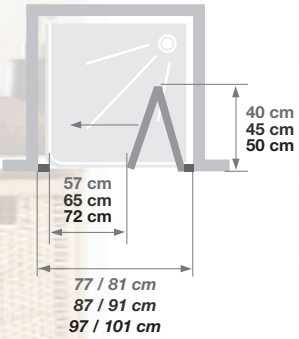

Cristal Plus anti limescale coating

Bi-fold Door

Product Code	Adjustment	Frame/Glass
PA681CTNE	770 - 810mm	Polished Silver/Clear
PA682CTNE	870 - 910mm	Polished Silver/Clear
PA683CTNE	970 - 1010mm	Polished Silver/Clear

When using a side panel add 37mm to these adjustments

For latest prices and delivery to your door visit MyTub Ltd - 0845 303 8383 - www.mytub.co.uk - info@mytub.co.uk

capricorn sliding door

FEATURES

- Generously proportioned shower door
- 1900mm high
- CristalPlus
- Quick release door for easy cleaning
- Telescopic adjustment for ultimate versatility
- Full height screw cover strips
- Profile cover caps
- 6mm toughened safety glass

sliding door

Telescopic Adjustable Single Sliding Doors & Fixed Panel

Product Code	Adjustment			Frame/Glass
PA641CTNE	950	to	1050mm	Polished Silver/Clear
PA642CTNE	1050	to	1150mm	Polished Silver/Clear
PA643CTNE	1150	to	1250mm	Polished Silver/Clear

When using a side panel add 37mm to these adjustments

CristalPlus anti limescale coating

For latest prices and delivery to your door visit MyTub Ltd - 0845 303 8383 - www.mytub.co.uk - info@mytub.co.uk

capricorn xl sliding door

FEATURES

- Generously proportioned shower doors
- 1900mm high
- CristalPlus
- Quick release doors for easy cleaning
- Full height screw cover strips
- Profile cover caps
- 6mm toughened safety glass

xl sliding door

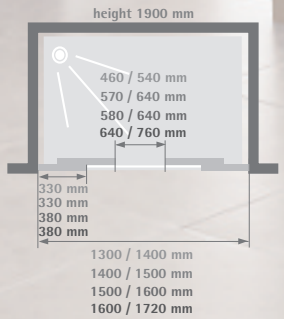

CristalPlus anti limescale coating

XL Double Sliding Doors

Product Code	Adjustment	Frame/Glass
PA651CTNE	1300 - 1400mm	Polished Silver/Clear
PA652CTNE	1400 - 1500mm	Polished Silver/Clear
PA653CTNE	1500 - 1600mm	Polished Silver/Clear
PA654CTNE	1600 - 1720mm	Polished Silver/Clear

When using a side panel add 37mm to these adjustments

Detail of screw cover strip

For latest prices and delivery to your door visit MyTub Ltd - 0845 303 8383 - www.mytub.co.uk - info@mytub.co.uk

capricorn panels

FEATURES

- 1900mm high
- Reversible
- CristalPlus
- Full height screw cover strips
- Profile cover caps
- Inline panel will extend your shower door by up to 850mm
- 6mm toughened safety glass

inline panel

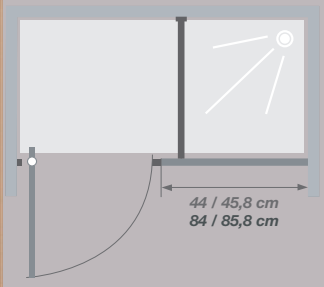

side panel

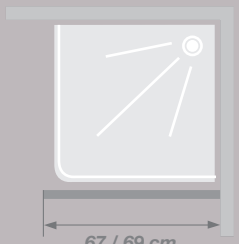

Inline Panel

Product Code	size	Frame/Glass
PA665CTNE	450mm*	Polished Silver/Clear
PA666CTNE	850mm*	Polished Silver/Clear

* Suitable for Pivot, Bifold and Telescopic sliding doors only.

CristalPlus anti limescale coating

Side Panel

Product Code	size	Frame/Glass
PA660CTNE	700mm	Polished Silver/Clear
PA664CTNE	760mm	Polished Silver/Clear
PA661CTNE	800mm	Polished Silver/Clear
PA662CTNE	900mm	Polished Silver/Clear
PA663CTNE	1000mm	Polished Silver/Clear

For technical advice and design only your dealer is MyTub Ltd - 0845 303 8383 - www.mytub.co.uk - info@mytub.co.uk

kinechrome pivot

FEATURES

- 4mm toughened safety glass
- 1850mm high
- Full height magnetic door seal
- Polished silver frame clear safety glass
- Suitable with kinechrome side panel
- Adjustable for out of true walls

kinechrome pivot

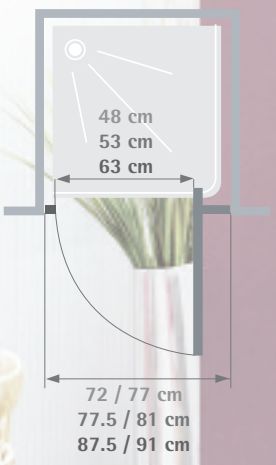

Pivot

Product Code	Size
PA5102CTN:	760mm
PA5103CTN:	800mm
PA5104CTN:	900mm

For Side Panels suitable for this product see page 26

For latest prices and delivery to your door visit MyTub Ltd - 0845 303 8383 - www.mytub.co.uk - info@mytub.co.uk

kinechrome bi-fold

FEATURES

- 4mm toughened safety glass
- 1850mm high
- Magnetic door closure
- Polished silver frame clear safety glass
- Suitable with kinechrome side panel
- Adjustable for out of true walls

kinechrome bi-fold

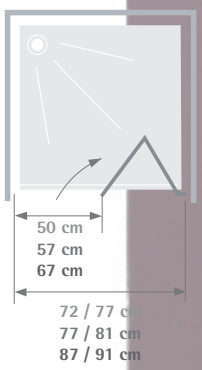

Bifold

Product Code	Size
PA5500CTN:	760 mm
PA5501CTN:	800 mm
PA5502CTN:	900 mm

For Side Panels suitable for this product see page 26
Image shown with optional side panel

For latest prices and delivery to your door visit MyTub Ltd - 0845 303 8383 - www.mytub.co.uk - info@mytub.co.uk

kinechrome quad

FEATURES

- 4mm toughened safety glass
- Polished silver frame
- All 1850mm high
- Clip out doors to aid cleaning
- Full height magnetic door seals

kinechrome quad

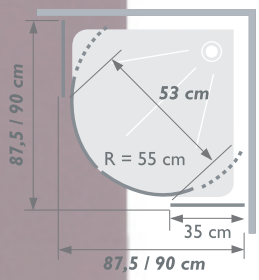

Quadrant

Product Code:	Size
PA5200CTN: Quadrant	900 x 900 mm

For latest prices and delivery to your door visit MyTub Ltd - 0845 303 8383 - www.mytub.co.uk - info@mytub.co.uk

kinechrome slider

FEATURES

- 4mm toughened safety glass
- Polished silver frame
- All 1850mm high
- Suitable with kinechrome side panel
- Clip out doors to aid cleaning
- Full height magnetic door seals

kinechrome slider

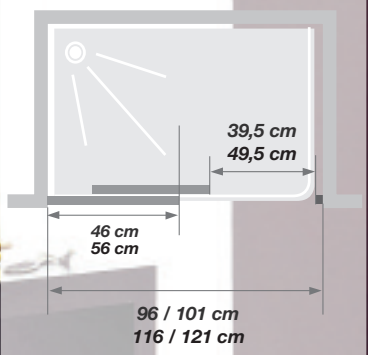

Slider

Product Code:	Size
PA5603CTN:	1000mm
PA5605CTN:	1200mm

Side Panel

Product Code	Size
PA5203CTN:	760mm
PA5201CTN:	800mm
PA5202CTN:	900mm

For latest prices and delivery to your door visit MyTub Ltd - 0845 303 8383 - www.mytub.co.uk - info@mytub.co.uk

kinechrome corner entry

FEATURES

- 4mm toughened safety glass
- Polished silver frame
- All 1850mm high
- Clip out doors to aid cleaning
- Full height magnetic door seals

kinechrome corner entry

Corner Entry

Product Code:	Size
PA5003CTN:	800 x 800mm
PA5004CTN:	900 x 900mm

For latest prices and delivery to your door visit MyTub Ltd - 0845 303 8383 - www.mytub.co.uk - info@mytub.co.uk

bath screen

FEATURES

- 1300mm high
- Fully reversible
- Pivots 180°
- Toughened safety glass
- Polished silver wall profile

bath screen

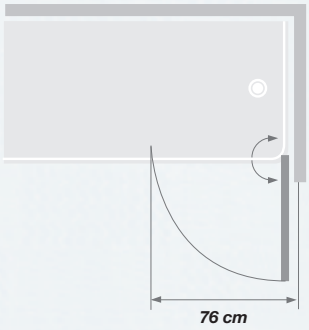

Samoa Bath Screen

Product code	Size
PB500CTN:	1300 x 760mm

For latest prices and delivery to your door visit MyTub Ltd - 0845 303 8383 - www.mytub.co.uk - info@mytub.co.uk

shower columns

Aqualigne

Product code	Colour
CD170	anthracite

aqualigne black

FEATURES

- Slimline full height shower column
- Body jets, handheld shower and large overhead spray
- Can be fitted into a corner or against one wall
- Thermostatic

aquaglass anthracite

FEATURES

- Frameless design
- Ideal for wet rooms
- Body jets, handheld shower and large overhead spray
- Can be fitted against one wall only
- Thermostatic

Crista Plus anti limescale coating

No Silicone Sealant Required

Aquaglass

Product code	Colour
CD200	anthracite

For latest prices and delivery to your door visit MyTub Ltd - 0845 303 8383 - www.mytub.co.uk - info@mytub.co.uk

Domestic Range

MACERATORS & PUMPS
FOR EXTRA FACILITIES
ALMOST ANYWHERE

Sanilife Range

NEW INCLUSIVE DESIGN RANGE

Professional Range

MACERATORS & PUMPS
FOR HEAVIER DUTY COMMERCIAL USE

Sanimarin Range

TOILETS & PUMPS
FOR MARINE USE

GUARANTEE: All Kinedo Shower enclosures, wet room panels and bath screens are guaranteed for **10** years from the date of purchase.
All Kinedo self contained shower cubicles are guaranteed for **2** years from the date of purchase.

SANIFLO & Kinedo

www.kinedo.co.uk

Saniflo Ltd, Howard House, The Runway, South Ruislip, Middlesex HA4 6SE
Tel: 020 8842 0033 Fax: 020 8842 1671 e-mail: sales@kinedo.co.uk

KB/04/10

8346

Copyright 2010 Saniflo Ltd. All rights reserved. No part of this publication may be reproduced, stored in a retrieval system or transmitted in any form or by any means, electronic, mechanical, photocopying, recording, computerised or otherwise without prior arrangement with and permission of Saniflo Ltd.

As our policy is one of continuous product improvement we reserve the right to alter product specification and price without notice. All information in this publication is given in good faith. No responsibility can be accepted for any errors, omissions or misinterpretations.

For latest prices and delivery to your door visit MyTub Ltd - 0845 303 8383 - www.mytub.co.uk - info@mytub.co.uk